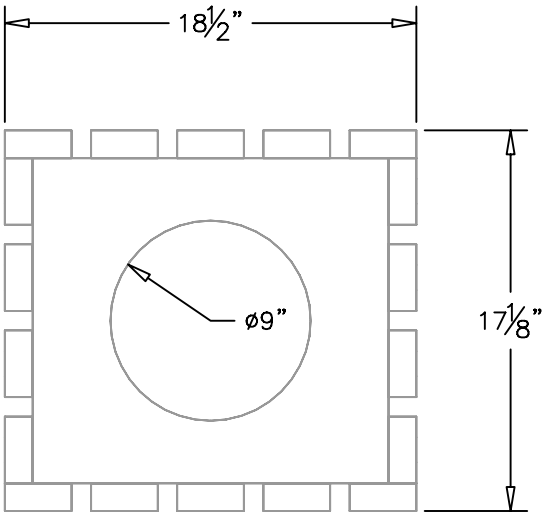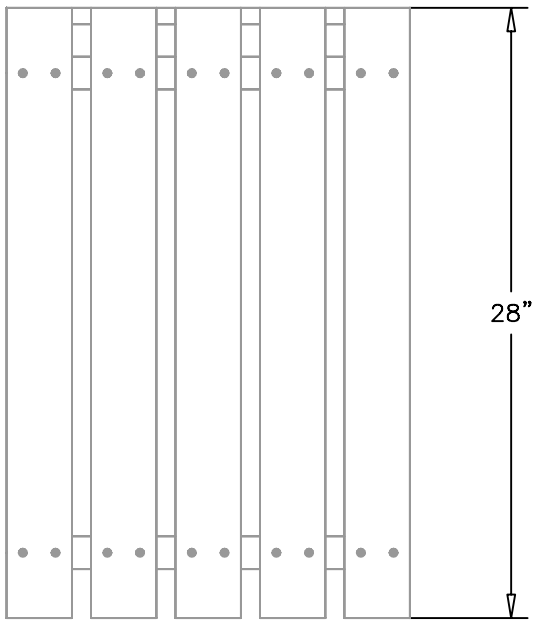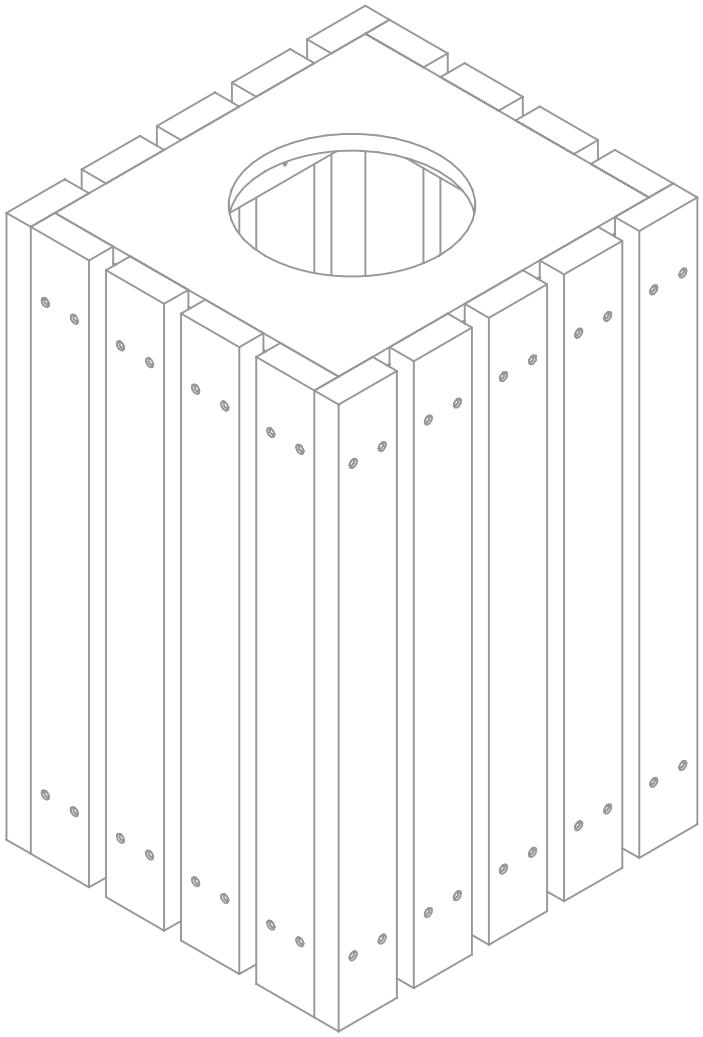ASM-EMT22-01