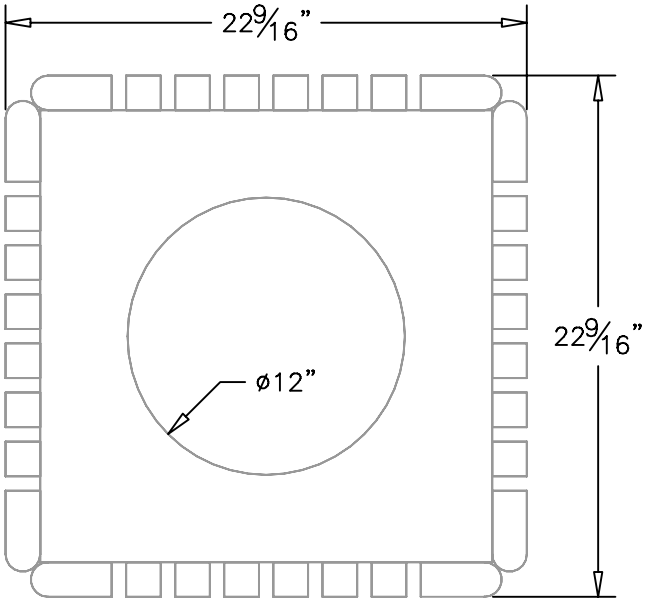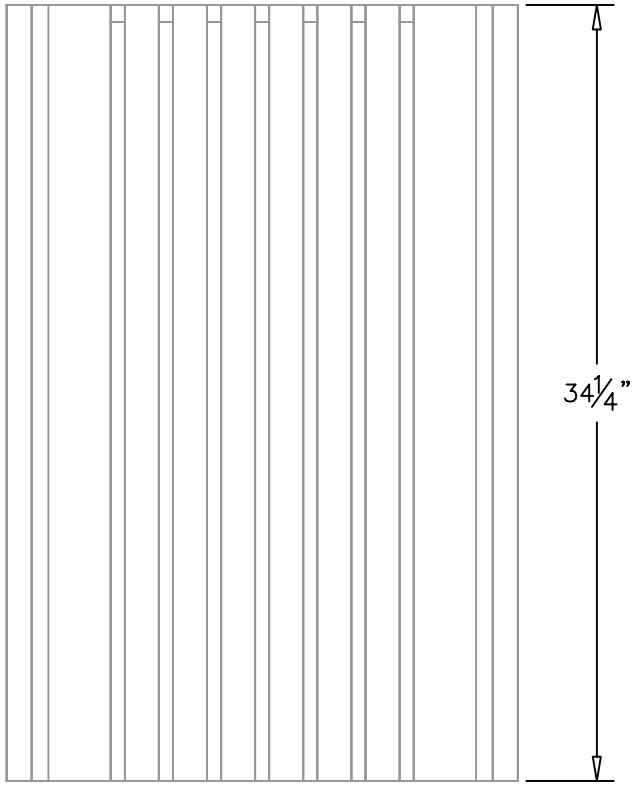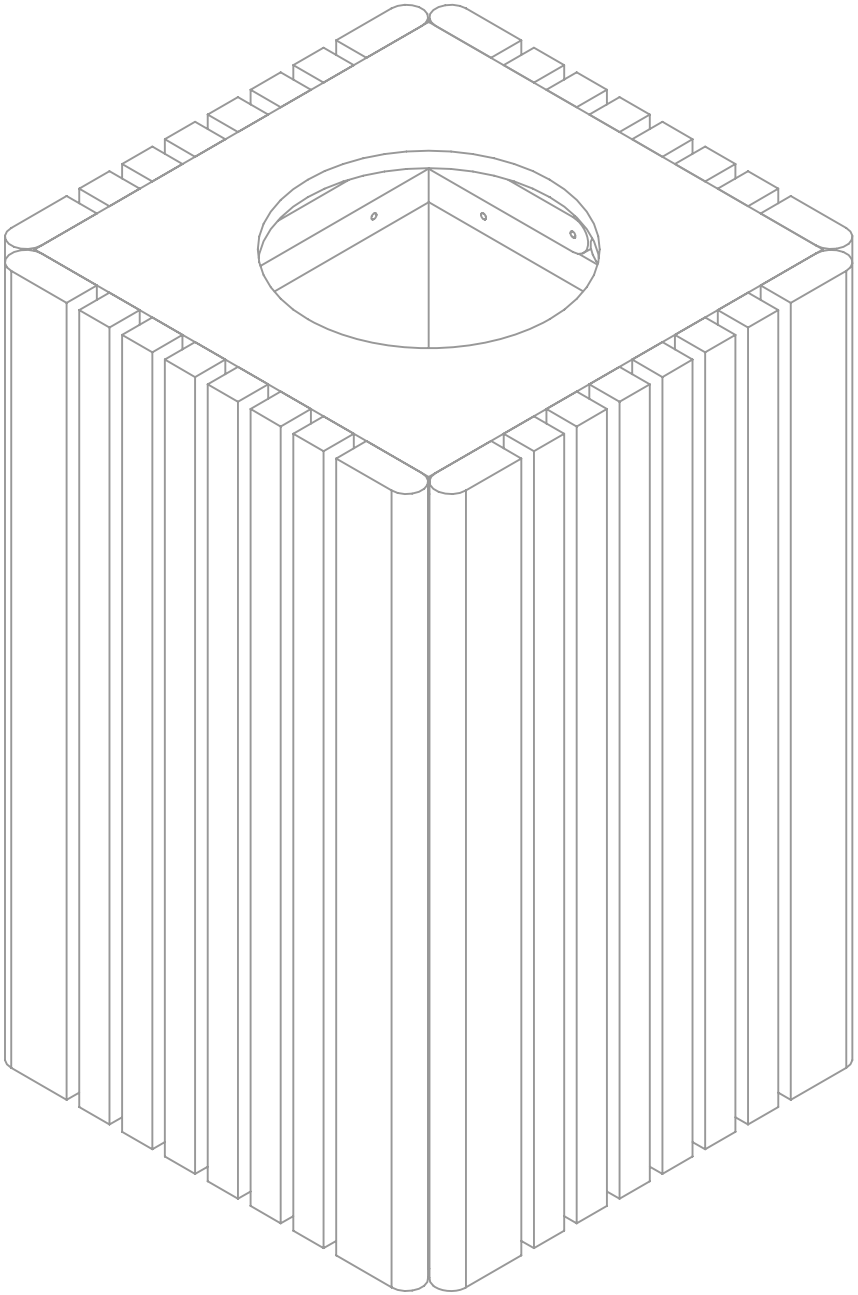ASM-T40-02